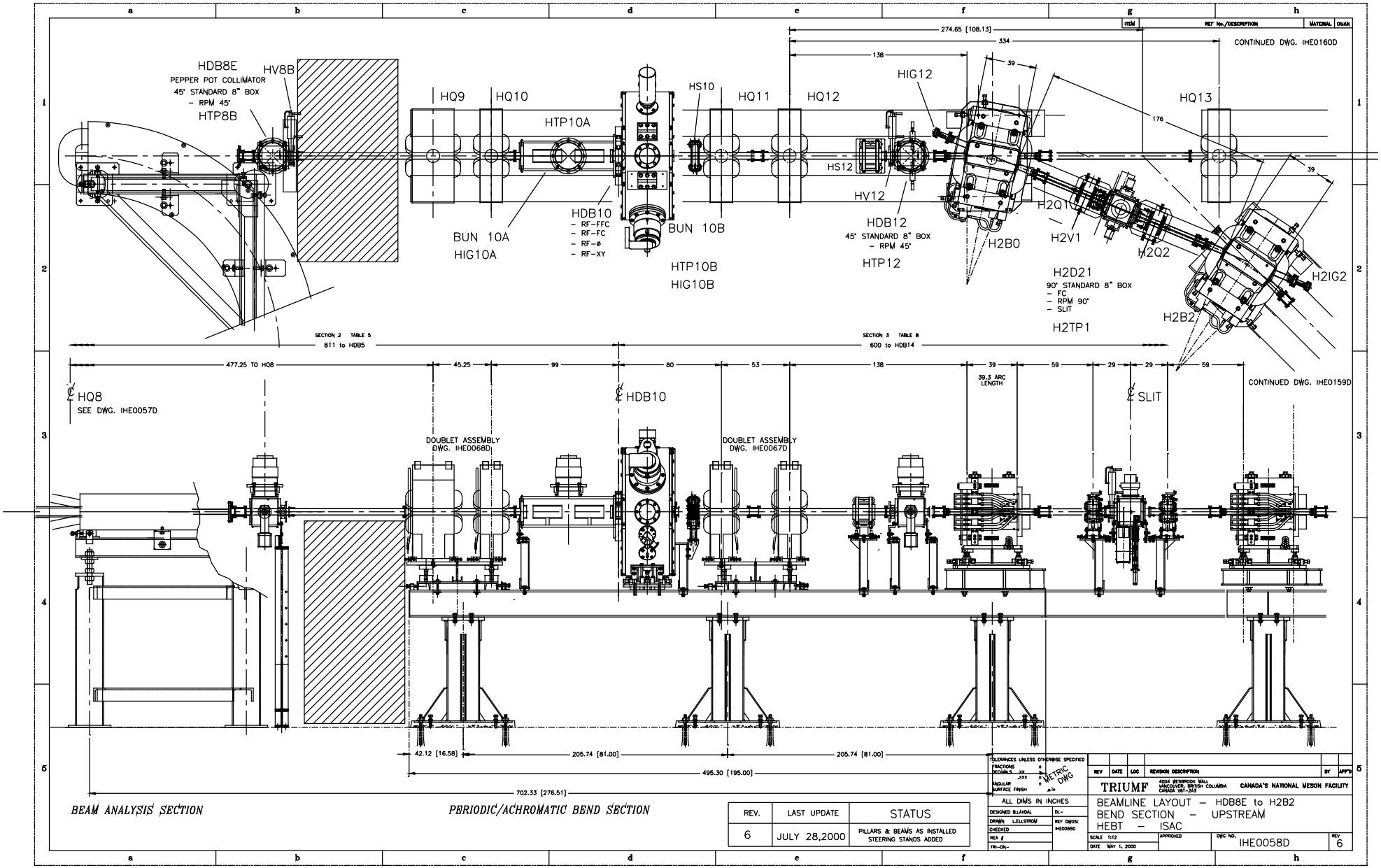

REV.	LAST UPDATE	STATUS
6	JULY 28,2000	PILLARS & BEAMS AS INSTALLED STEERING STANDS ADDED

TOLERANCES UNLESS OTHERWISE SPECIFIED
FRACTIONS ±
DECIMALS .XX ±
.XXX ±
ANGULAR ±
SURFACE FINISH ±in
METRIC DWG

ALL DIMS IN INCHES

DESIGNED B.LAXDAL
DRAWN L.ELLSTROM
CHECKED
REA #
TR-DN-
DL-
REF DWGS: IHE0055D

REV	DATE	LOC	REVISION DESCRIPTION	BY	APP'D

TRIUMF 4004 WESBROOK MALL VANCOUVER, BRITISH COLUMBIA CANADA V6T-2A3 CANADA'S NATIONAL MESON FACILITY

BEAMLINE LAYOUT – HDB8E to H2B2
BEND SECTION – UPSTREAM
HEBT – ISAC

SCALE 1:12
DATE MAY 1, 2000
APPROVED
DWG NO. IHE0058D
REV 6